Model A600
Liquids & Solids Waste Disposal

LOW COST!

The next generation…
from a leading maker of Incinerators

All the features you've been looking for!

- Single batch load capacity up to 600 lbs. of solid waste, liquid waste capcity will be less depending on percentage of liquid (must not flood burner port).
- Easy loading 30 inch height.
- No visible emissions or odors.
- Easy to use… Set timer, walk away.
- Thick high temperature refractory lining throughout… Extends equipment life.
- Available with Diesel, Natural Gas, or LPG burners.

LOWEST EQUIPMENT OPERATING COST IN THE INDUSTRY!

Designed specifically for…
Restaurants, Food Retailers, Shelters, Schools, Processors, Community and Residence Halls.

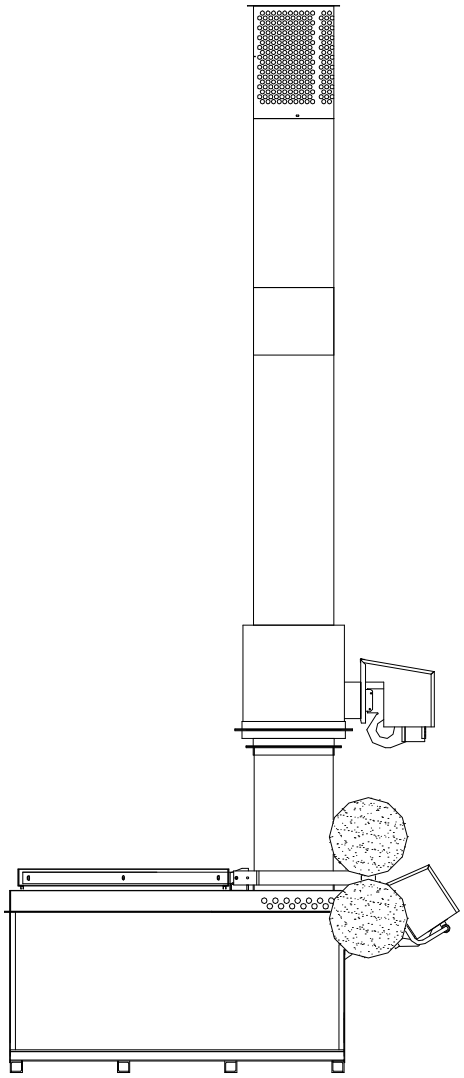

Distributed By:

Model A600

Firelake Mfg. LLC
919 Cottontail Trail
Mt. Crawford. VA 22841

Phone: 866-252-3757
Fax: 866-252-3877
www.firelakeincinerators.com

Benefits and Features of the A600 Solids/Liquids Unit

Fast, complete, efficient waste disposal

- χ Concave refractory bottom specifically designed to insure burnout and total destruction of wastes.
- χ Secondary chamber, and insulated refractory-lined stacks for emissions control.

Minimum installation and start-up time

- χ Factory assembled, aluminized steel jacket lined with high-temperature refractory.
- χ Recorders and accessory equipment available.

Easy and safe operation

- χ Counter-balanced fill door.
- χ Timer control system provides preset burn times and automatic shut off.

Low energy consumption levels

- χ Choice of fuels: LP , natural gas, or diesel.

Specifications Summary*

A600-LP Propane-Fired System complete with two burners, secondary chamber, stack, timer.
A600-NG Natural Gas-Fired System complete with two burners, secondary chamber, stack, timer.
A600-Oil Diesel Fired System complete with two burners, secondary chamber, stack, timer.

WASTE CHAMBER Chamber capacity (Type 4 waste-pathological)		600 lbs	272 kg
Chamber volume (approximate)		18.9 cu. ft.	0.7 cu. m.
Chamber size (outside)	Width	36”	91 cm
	Height	34”	86 cm
	Length	60”	152 cm
Door opening		29” x 35”	74 cm x 89 cm
Height to door		30.5”	77 cm
Height to top of secondary chamber		7’-1”	2.2 m
Overall dimensions (w/stack)		189”H x 57”Wx 83”L	4.9m x 1.5 m x 2.1m
Suggested slab size (l x w x thick)		10’ x 12’ x 6”	3.0 m x 3.7m x 15cm
STACK Dimensions (OD)		Stainless Steel 14”	36 cm
Chamber		14 gauge aluminized steel jacket, refractory lined, painted.	
REFRACTORY THICKNESS			
	Primary	3.0”(2800F)	7.6 cm
	Secondary	1.5”(2800F)	3.8 cm

INSTALLATION
Must be installed in accordance with local codes and ordinances, subject to regulatory agencies. Outside installation is recommended with a simple metal roof or three-sided metal shelter, providing a minimum of four foot clearance from any combustible roof materials. Minimum of 18” clearance is required for penetration of combustible roof materials. Inside installations may have special insurance requirements. Factory must be advised.

GENERAL
Electrical service
Standard – 115 volt, 60 HZ, 20 amp
Also available – 220 volt, 50 HZ, 10 amp
BURNERS
LP , Natural gas. Or Diesel burners with spark ignition and flame safety shut-off.
OPERATION
Manual timer
TOTAL WEIGHT
2000 lbs. (approximate) 910 kg

APP. CONSUMPTION	LP	NATURAL GAS	DIESEL
Upper burner	0.8 GPH	75 CFH	0.6 GPH
Lower burner	5.8 GPH	530 CFH	3 GPH
APPROXIMATE BTUH ^1			
Upper burner	75,000	75,000	75,000
Lower burner	530,000	530,000	420,000

*Consult factory for specific design or installation questions. Equipment design changes or components modifications to reduce costs or improve function are periodically done.

1. Fuel consumption approximate. Actual fuel use depends on BTU content of waste. Consult factory for retention times or special requirements

Firelake Mfg. LLC
919 Cottontail Trail
Mt. Crawford, VA 22841

Phone: 866-252-3757
Fax: 866-252-3877
www.firelakeincinerators.com